REVISIONS			
REV.	DESCRIPTION	DATE	ECN
A	INITIAL RELEASE	10/19/17	2813
B	MATERIAL UPDATE	7/12/2018	3056

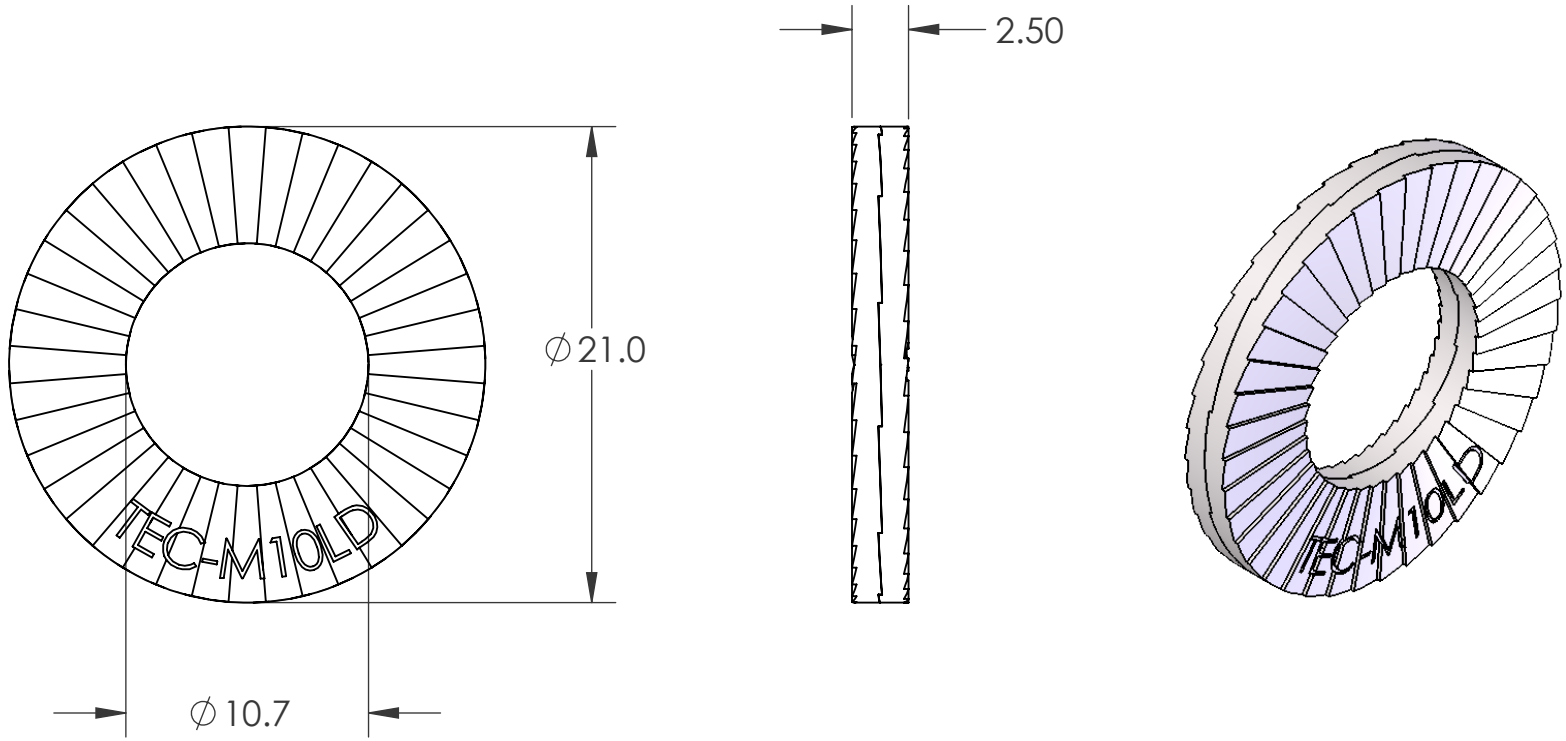

PROPRIETARY AND CONFIDENTIAL

THIS DRAWING, AND THE INFORMATION CONTAINED HERIN, ARE THE PROPERTY OF SHEREX AND ARE NOT TO BE USED IN ANY MANNER DETRIMENT TO THE INTEREST OF THE COMPANY.

SHEREX FASTENING SOLUTIONS RESERVES THE RIGHT TO REVISE PART/DRAWING WITHOUT NOTICE.

DRAWING NO.: TEC-M10LD

UNLESS OTHERWISE SPECIFIED:

DIMENSIONS ARE IN MILLIMETERS
TOLERANCES:
ANGULAR: MACH ± 1 BEND ±1
I.D. TOLERANCE: ±0.2
O.D. TOLERANCE: ±0.2
THICKNESS TOLERANCE: ±0.25

INTERPRET GEOMETRIC TOLERANCING PER: ASME Y14.5M-1994

MATERIAL
SCM435 OR 4130 STEEL, HT: THROUGH HARDEN 465 HV MIN

FINISH
DELTA PROTEKT BASE COAT (KL100) & TOP COAT (VH302GZ)

DO NOT SCALE DRAWING

	NAME	DATE
DRAWN	MTB	10/19/17
CHECKED		
ENG APPR.	JVK	10/19/17
MFG APPR.		
Q.A.		

COMMENTS:
E-mail: info@disc-lock.com
www.disc-lock.com
Phone: 866-474-3739
Fax: 716-875-0358

TECSERIES
A SHEREX FASTENING SOLUTIONS® PRODUCT

DESCRIPTION:
LARGE DIAMETER TEC WASHER GLUED PAIR 10MM

SIZE	PART NO.:	REV
A	TEC-M10LD	B

SCALE: 3:1 | WEIGHT: | SHEET 1 OF 1

5 4 3 2 1